Sentor

RIGHT-HAND CORNER ACRYLIC BATH WITH OVERFLOW, 1500MM

- Two-sided bath with tile lip edge
- UV stabilised premium sanitary-grade acrylic with Lucite MMA
- Built-in overflow (located opposite to wall)
- Chrome pull-out/pop-up waste included
- Built-in steel support frame
- Adjustable self-supporting feet
- Capacity: 181L
- Net weight: 45 kg
- Gross weight: 53 kg

Installation Warning: Floor preparation may be required for off-centre waste positions. Please discuss with your builder/plumber before tiling and waterproofing your bathroom.

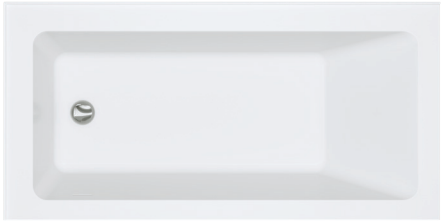



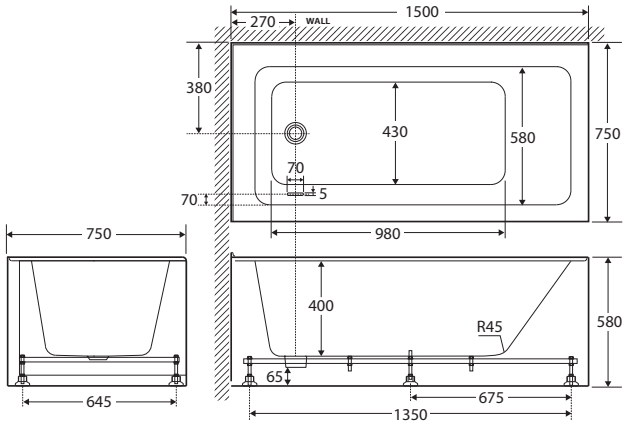

Available in



Gloss White

FR02-1500R-OF

Cleaning & Care

- Regularly clean with mild soapy water using a microfibre cloth. Weekly cleaning is recommended.
- Do not use harsh detergents, bleach, cream cleaners, window cleaning sprays, or citrus based cleaners.
- Do not use undue pressure and wipe in one direction only.
- If using coloured essential oils, test in an inconspicuous area with water to ensure they won't stain the bath. Always add oils to a bath full of water.

We aim to ensure that specifications are correct at the time of publication. All measurements are shown in millimetres. Always use measurements of actual product received for final specification as the technical drawing may contain differences. Due to printing limitations, physical colour may vary from the image shown. Fienza reserves the right to make modifications without prior notice.

Sentor

LEFT-HAND CORNER ACRYLIC BATH WITH OVERFLOW, 1500MM

- Two-sided bath with tile lip edge
- UV stabilised premium sanitary-grade acrylic with Lucite MMA
- Built-in overflow (located opposite to wall)
- Chrome pull-out/pop-up waste included
- Built-in steel support frame
- Adjustable self-supporting feet
- Capacity: 181L
- Net weight: 45 kg
- Gross weight: 53 kg

Installation Warning: Floor preparation may be required for off-centre waste positions. Please discuss with your builder/plumber before tiling and waterproofing your bathroom.





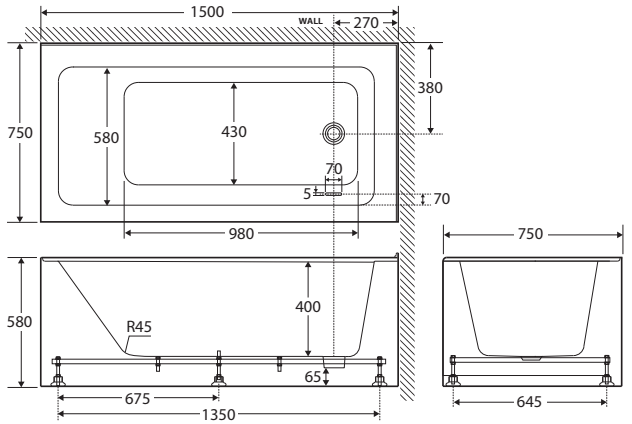

Available in



Gloss White

FR02-1500L-OF

Cleaning & Care

- Regularly clean with mild soapy water using a microfibre cloth. Weekly cleaning is recommended.
- Do not use harsh detergents, bleach, cream cleaners, window cleaning sprays, or citrus based cleaners.
- Do not use undue pressure and wipe in one direction only.
- If using coloured essential oils, test in an inconspicuous area with water to ensure they won't stain the bath. Always add oils to a bath full of water.

We aim to ensure that specifications are correct at the time of publication. All measurements are shown in millimetres. Always use measurements of actual product received for final specification as the technical drawing may contain differences. Due to printing limitations, physical colour may vary from the image shown. Fienza reserves the right to make modifications without prior notice.