MOROCCO 150CM FREESTANDING BATH WHITE

Code: MORB150WH

- Double-skin Sanity grade acrylic sheets
- Reinforced with High-quality fiberglass
- Durable, easy to clean and retains heat
- High Stability whilst being light in weight for installation.
- Adjustable self-supporting feet
- Designed for easy installation
- Drain and overflow assembly included
- Integrated overflow
- Includes Pop-up waste

Pop-Up Plug Waste Options





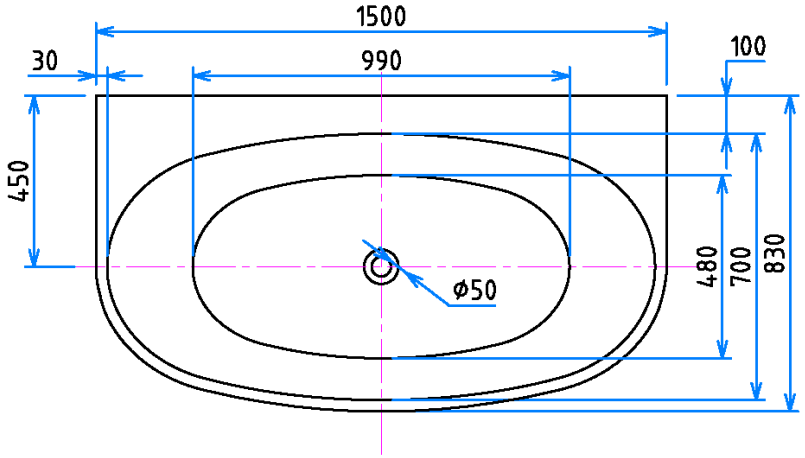

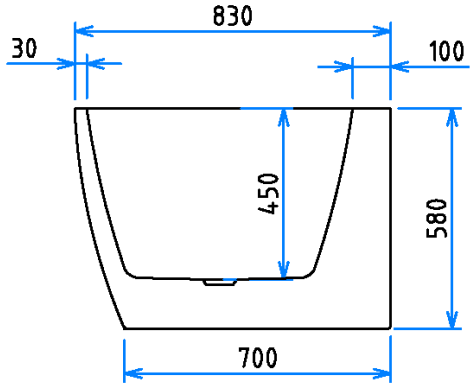

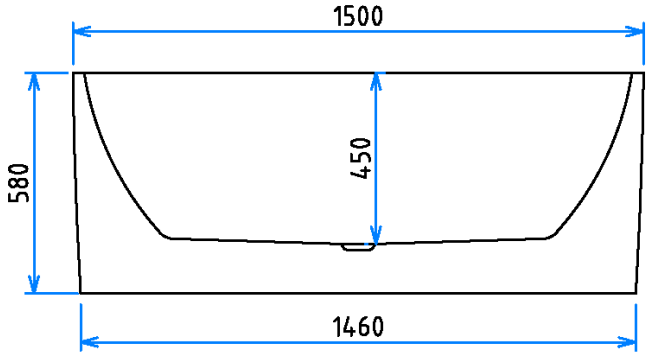



All dimensions stated are nominal sizes. Variations may occur during manufacturing, and care should be taken to check sizing before installation as measurments/drawing specifications are a guide only and subject to change without notice.

MOROCCO 170CM FREESTANDING BATH WHITE

Code: MORB170WH

- Double-skin Sanity grade acrylic sheets
- Reinforced with High-quality fiberglass
- Durable, easy to clean and retains heat
- High Stability whilst being light in weight for installation.
- Adjustable self-supporting feet
- Designed for easy installation
- Drain and overflow assembly included
- Integrated overflow
- Includes Pop-up waste

Pop-Up Plug Waste Options





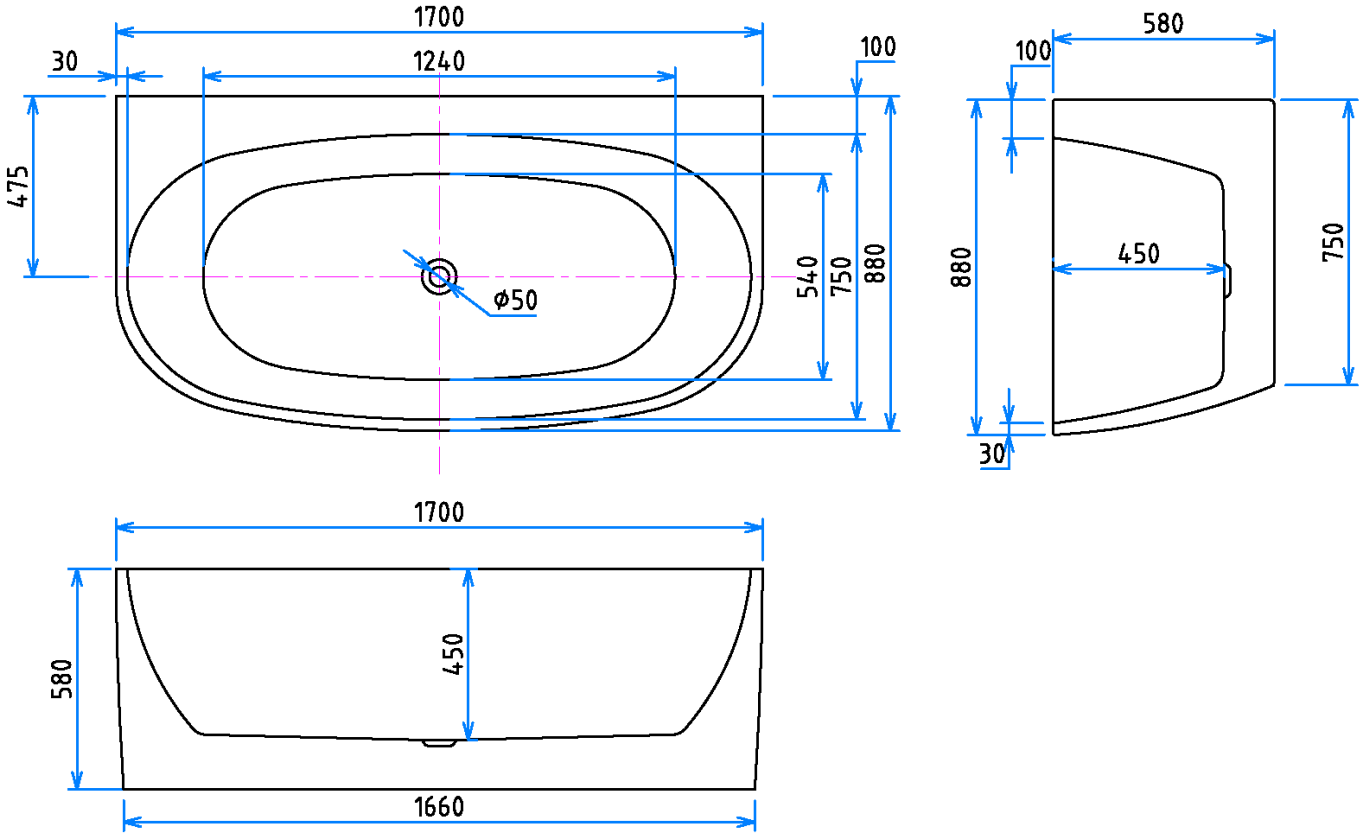



All dimensions stated are nominal sizes. Variations may occur during manufacturing, and care should be taken to check sizing before installation as measurments/drawing specifications are a guide only and subject to change without notice.