Marine Double Drawer PVC Vanity Unit 90cm

90cm Width x 47cm Depth x 75cm Height

Code: COMAR90



Front

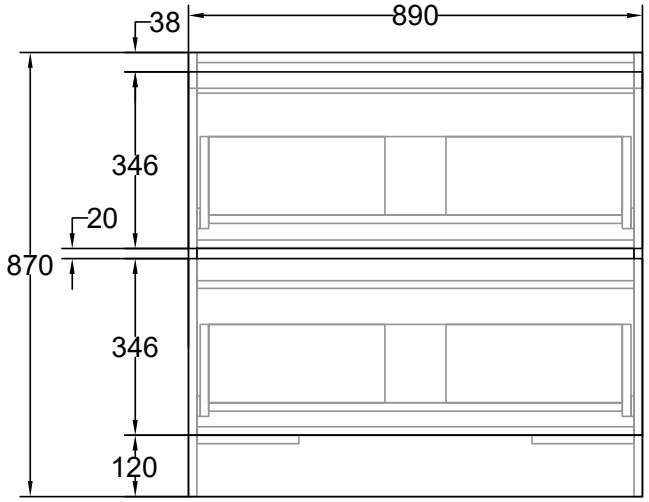

Right

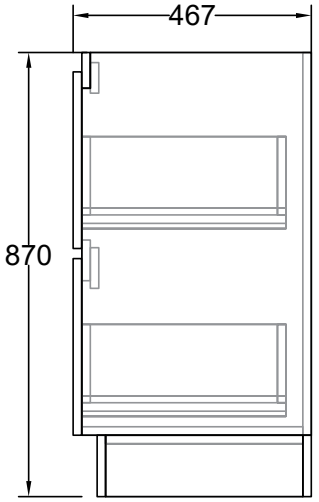

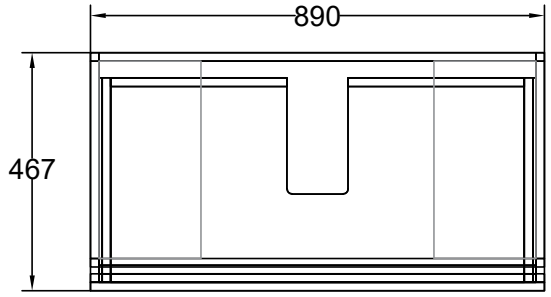

Top

All dimensions stated are nominal sizes. Variations may occur during manufacturing, and care should be taken to check sizing before installation as measurements/drawing specifications are a guide only and subject to change without notice.

Marine Drawer & Shelf PVC Vanity Unit 90cm

90cm Width x 47cm Depth x 58.4cm Height

Code:COMARSH90



Front

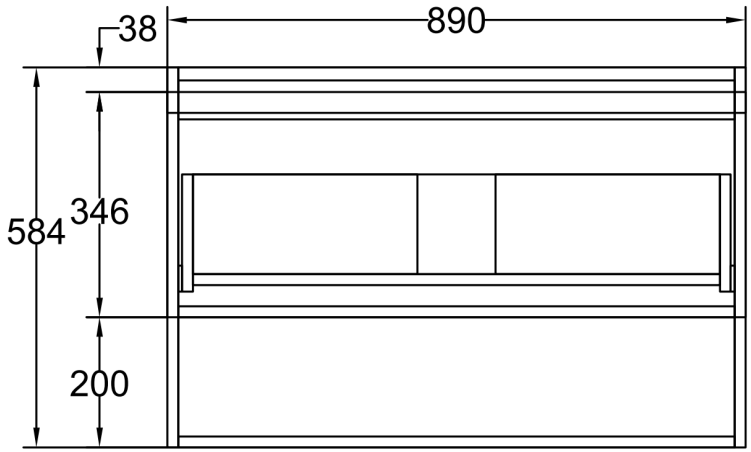

Right

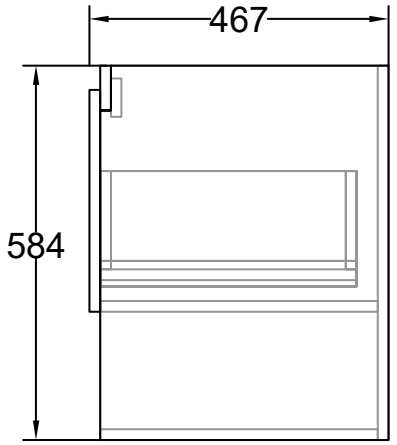

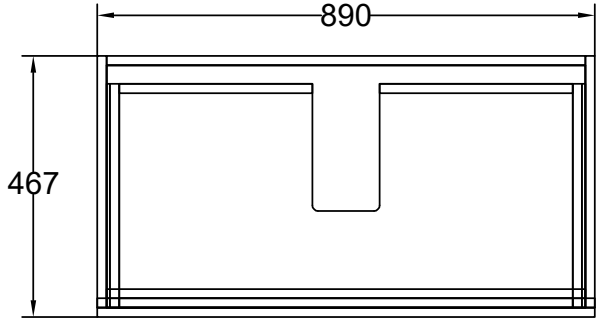

Top

- **High-Grade PVC Board**
- **Completely waterproof**

All dimensions stated are nominal sizes. Variations may occur during manufacturing, and care should be taken to check sizing before installation as measurements/drawing specifications are a guide only and subject to change without notice.