Clawfoot

FREESTANDING ACRYLIC BATH, 1500MM

- Freestanding style on lion claw feet
- Traditional slipper shape with a rolled top edge
- Gloss white, UV stabilised sanitary-grade acrylic
- Inbuilt steel support frame
- Adjustable steel feet supports
- Built-in overflow
- Requires 40mm overflow waste (not included)
- Capacity: 180L
- Net weight: 33kg
- Gross weight: 43kg

Installation Warning: Floor preparation may be required for off-centre waste positions. Please discuss with your builder/plumber before tiling and waterproofing your bathroom.





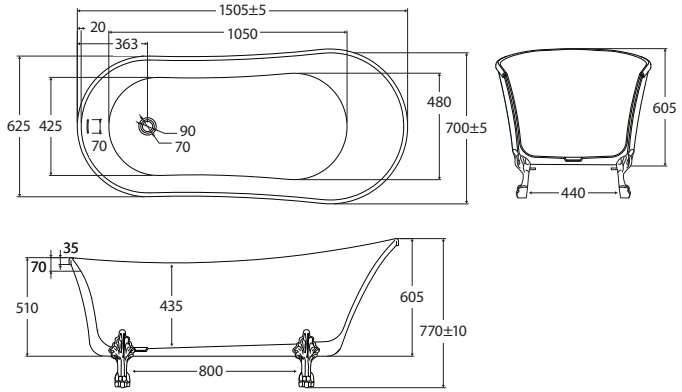

Available with

Chrome Feet	White Feet	Matte Black Feet
FR26-1500C-OF	FR26-1500W-OF	FR26-1500B-OF
Brushed Nickel Feet	**Brushed Copper Feet**	**Urban Brass Feet**
FR26-1500BN-OF	FR26-1500CO-OF	FR26-1500UB-OF

Cleaning & Care

- Regularly clean with mild soapy water using a microfibre cloth. Weekly cleaning is recommended.
- Do not use harsh detergents, bleach, cream cleaners, window cleaning sprays, or citrus based cleaners.
- Do not use undue pressure and wipe in one direction only.
- If using coloured essential oils, test in an inconspicuous area with water to ensure they won't stain the bath. Always add oils to a bath full of water.

We aim to ensure that specifications are correct at the time of publication. All measurements are shown in millimetres. Always use measurements of actual product received for final specification as the technical drawing may contain differences. Due to printing limitations, physical colour may vary from the image shown. Fienza reserves the right to make modifications without prior notice.