Amato®

750MM CABINET ON KICKBOARD WITH SOLID PANELS

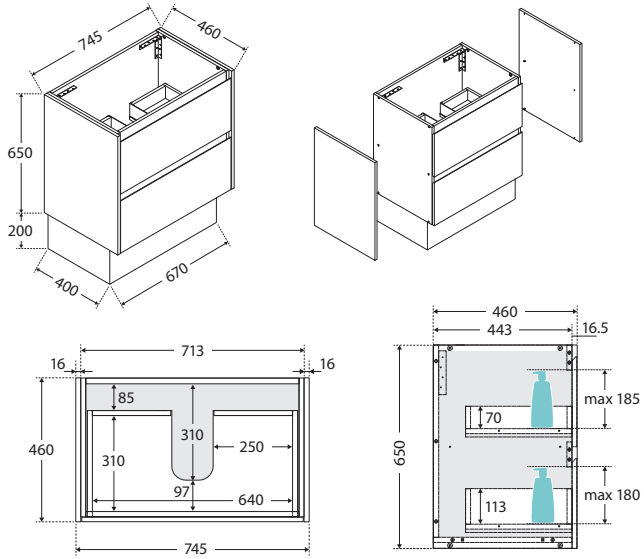

Features

- Customised options with solid side panels in five finishes
- Bevelled edge pull channel
- Interior drawer finish matches the external drawer fronts
- Full extension, soft close drawer runners
- 16 mm thick backing board and drawer bases
- Made from sustainably sourced timber

Available in

Satin White with Satin White Panels
75BWK

Scandi Oak with Scandi Oak Panels
75BSK

Walnut with Walnut Panels
75BWAK

Industrial with Industrial Panels
75BXK

Satin Black with Satin Black Panels
75BBK

Mixed finishes available. See our website for details.

Cleaning & Care

- Regularly clean with mild soapy water using a clean, soft cloth.
- Do not use harsh detergents, bleach, abrasive cleaners or cream/wax cleaners. These substances can results in scratches and/or deposit build-ups that will affect the appearance.
- Avoid placing hot objects, such as hair straighteners, on any surface as these will cause discolouration and marking.
- Spills of hair dye, after-shave lotion, nail polish and remover, aerosol spray and other harsh chemicals should be removed immediately to prevent damage and discolouration. Clean immediately with mild soapy water using a clean, soft cloth.

We aim to ensure that specifications are correct at the time of publication. All measurements are shown in millimetres. For MDF cabinetry, please allow +/- 5 mm tolerance per 1000 mm for manufacturing variance in straightness. Always use measurements of actual product received for final specification as the technical drawing may contain differences. Due to printing limitations, physical colour may vary from the image shown. Fienza reserves the right to make modifications without prior notice.

Amato®

900MM CABINET ON KICKBOARD WITH SOLID PANELS

Features

- Customised options with solid side panels in five finishes
- Bevelled edge pull channel
- Interior drawer finish matches the external drawer fronts
- Full extension, soft close drawer runners
- 16 mm thick backing board and drawer bases
- Made from sustainably sourced timber

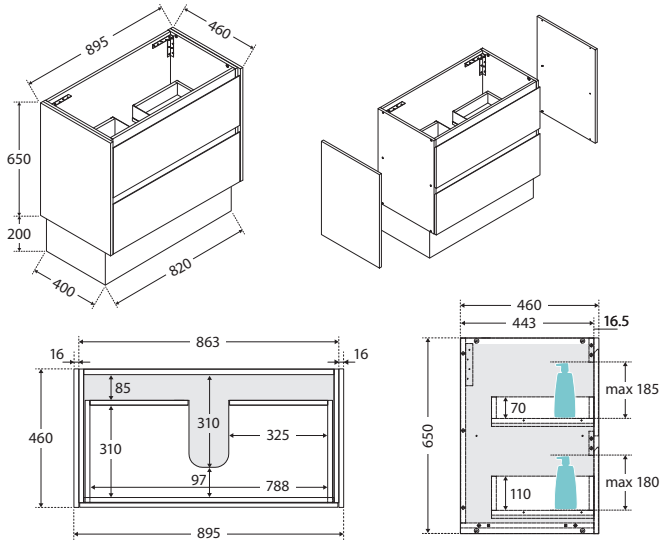

Available in

Satin White with Satin White Panels
90BWK

Scandi Oak with Scandi Oak Panels
90BSK

Walnut with Walnut Panels
90BWAK

Industrial with Industrial Panels
90BXK

Satin Black with Satin Black Panels
90BBK

Mixed finishes available. See our website for details.

Cleaning & Care

- Regularly clean with mild soapy water using a clean, soft cloth.
- Do not use harsh detergents, bleach, abrasive cleaners or cream/wax cleaners. These substances can results in scratches and/or deposit build-ups that will affect the appearance.
- Avoid placing hot objects, such as hair straighteners, on any surface as these will cause discolouration and marking.
- Spills of hair dye, after-shave lotion, nail polish and remover, aerosol spray and other harsh chemicals should be removed immediately to prevent damage and discolouration. Clean immediately with mild soapy water using a clean, soft cloth.

We aim to ensure that specifications are correct at the time of publication. All measurements are shown in millimetres. For MDF cabinetry, please allow +/- 5 mm tolerance per 1000 mm for manufacturing variance in straightness. Always use measurements of actual product received for final specification as the technical drawing may contain differences. Due to printing limitations, physical colour may vary from the image shown. Fienza reserves the right to make modifications without prior notice.

Amato®

1200MM CABINET ON KICKBOARD WITH SOLID PANELS

Features

- Customised options with solid side panels in five finishes
- Bevelled edge pull channel
- Interior drawer finish matches the external drawer fronts
- Full extension, soft close drawer runners
- 16 mm thick backing board and drawer bases
- Made from sustainably sourced timber

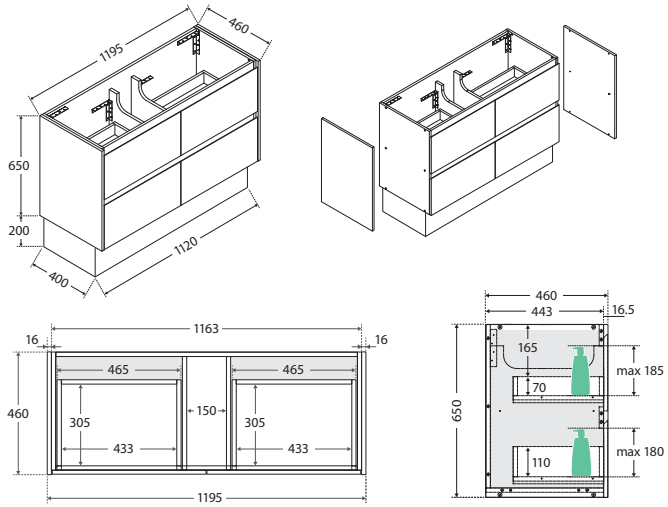

Available in

Satin White with Satin White Panels

120BWK

Scandi Oak with Scandi Oak Panels

120BSK

Walnut with Walnut Panels

120BWAK

Industrial with Industrial Panels

120BXK

Satin Black with Satin Black Panels

120BBK

Mixed finishes available. See our website for details.

Cleaning & Care

- Regularly clean with mild soapy water using a clean, soft cloth.
- Do not use harsh detergents, bleach, abrasive cleaners or cream/wax cleaners. These substances can results in scratches and/or deposit build-ups that will affect the appearance.
- Avoid placing hot objects, such as hair straighteners, on any surface as these will cause discolouration and marking.
- Spills of hair dye, after-shave lotion, nail polish and remover, aerosol spray and other harsh chemicals should be removed immediately to prevent damage and discolouration. Clean immediately with mild soapy water using a clean, soft cloth.

We aim to ensure that specifications are correct at the time of publication. All measurements are shown in millimetres. For MDF cabinetry, please allow +/- 5 mm tolerance per 1000 mm for manufacturing variance in straightness. Always use measurements of actual product received for final specification as the technical drawing may contain differences. Due to printing limitations, physical colour may vary from the image shown. Fienza reserves the right to make modifications without prior notice.

Amato®

1500MM CABINET ON KICKBOARD WITH SOLID PANELS

Features

- Bevelled edge pull channel
- Interior drawer finish matches the external drawer fronts
- Full extension, soft close drawer runners
- 16 mm thick backing board and drawer bases
- Made from sustainably sourced timber

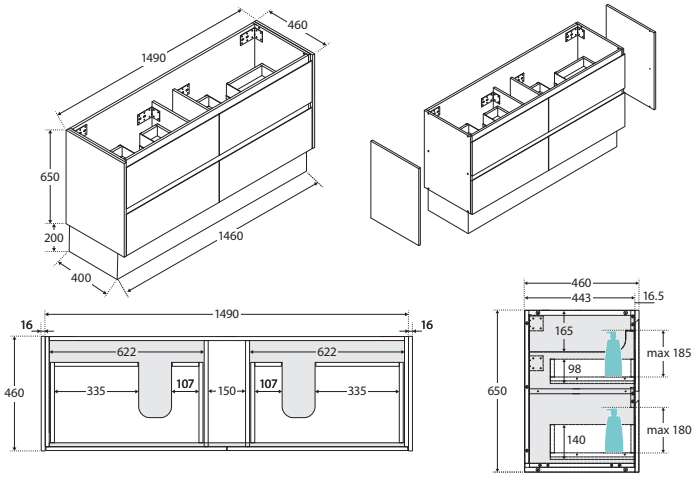

Available in

Satin White with Satin White Panels

150BWK

Scandi Oak with Scandi Oak Panels

150BSK

Walnut with Walnut Panels

150BWAK

Cleaning & Care

- Regularly clean with mild soapy water using a clean, soft cloth.
- Do not use harsh detergents, bleach, abrasive cleaners or cream/wax cleaners. These substances can results in scratches and/or deposit build-ups that will affect the appearance.
- Avoid placing hot objects, such as hair straighteners, on any surface as these will cause discolouration and marking.
- Spills of hair dye, after-shave lotion, nail polish and remover, aerosol spray and other harsh chemicals should be removed immediately to prevent damage and discolouration. Clean immediately with mild soapy water using a clean, soft cloth.

We aim to ensure that specifications are correct at the time of publication. All measurements are shown in millimetres. For MDF cabinetry, please allow +/- 5 mm tolerance per 1000 mm for manufacturing variance in straightness. Always use measurements of actual product received for final specification as the technical drawing may contain differences. Due to printing limitations, physical colour may vary from the image shown. Fienza reserves the right to make modifications without prior notice.